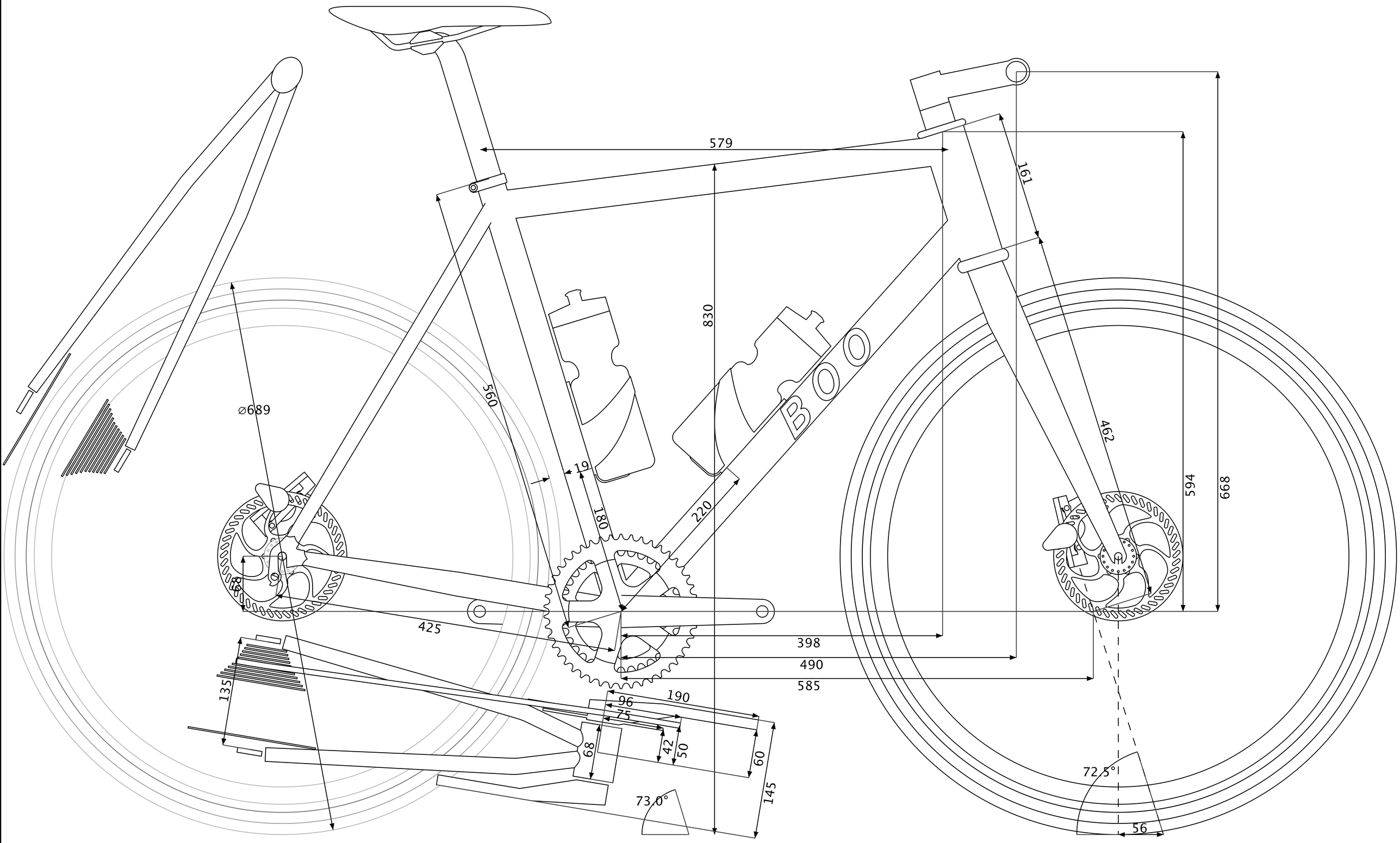

34.9 carbon seat tube
31.6 seatpost
46x68 Press Fit 30 carbon BB
49.6 carbon HT
36-46-175 road crank
Internal RB cable through TT
One cable guide on top of ND SS
Internal RD cable through TT
Two cable guides on top of DS SS
Standard road FD cable under BB with slot
Disc brakes
38mm tire clearance
fork 395 a-c length / 50mm offset

Fri, Apr 18, 2014	Boo Bicycles
Cross L	www.boobicycles.com
	nick@boobicycles.com
	(515) 554-9226
	1750 Laporte Avenue Fort Collins, CO 80521

boo BICYCLES